TECHNICAL DATA SHEET

Low-Voltage current sensor

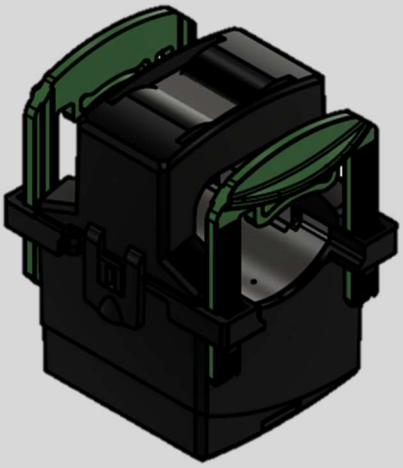

Phase current sensor
LxxxT-28

Non-conventional -
instrument current transformer

Description

The low voltage current sensor offers a cost efficient solution for low voltage applications. The sensor has a wide measurement range up to 10 times of the nominal current. The output of the sensor is according the IEC standard and is compatible to standard devices e.g. SICAM FCM. The sensor is covered by a housing for multipurpose application on cables for retrofit applications

Features

- No calibration on site is needed
- Class 1 or 0,5 acc. IEC61869-10
- Wide measurement range
- Cost efficient and robust design
- For cable diameters up to 28mm
- Accuracy over complete lifespan
- Split core type for easy installation

Advantages

- No interruption of electricity during the installation on insulated conductors necessary
- Only one sensor version for a big range of nominal primary currents (100A-400A) needed
- Non-intrusive and easy installation due to no tools needed

Dimensions

The sensor is inside a splitable plastic housing. The sensor is equipped with a 2 pole connection cable. (7m standard). The sensor is fixed on a cable with an easy crimp on mechanic.

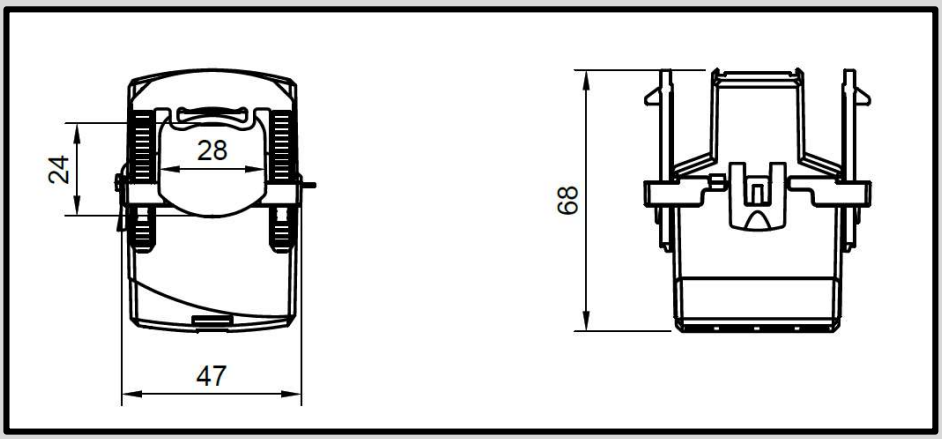

Installation

The low voltage sensor is simple to install, the split core designs makes it easy, once the low voltage cable is already installed.

There are some important points that should be considered during the installation process:

- Always power down before installation
- Due to the design of this product, there is no danger of high voltages, if the sensor is not short circuited or connected to a measurement device

Optional shield handling
Shield of voltage cable MUST BE led through the current sensor

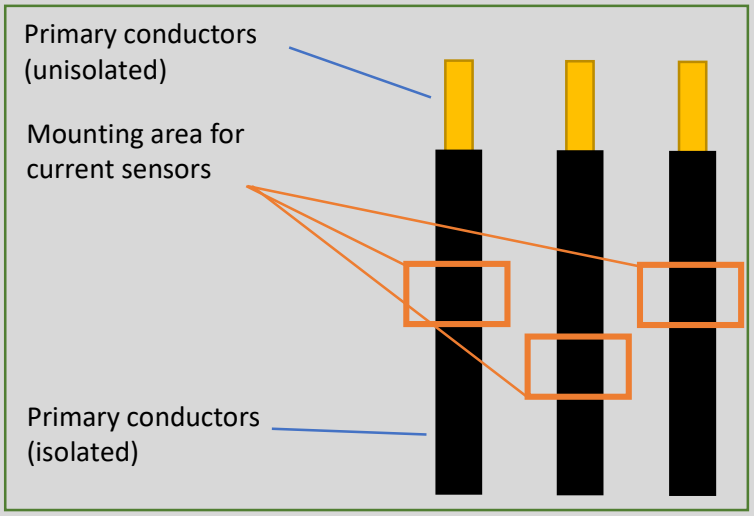

Connection

The current sensor is directly connected to a measurement device, like the Siemens SICAM FCM.
Sensor must not be earthed to the switchgear.
Fix the current sensor with the fixation system of the sensor on both sides.

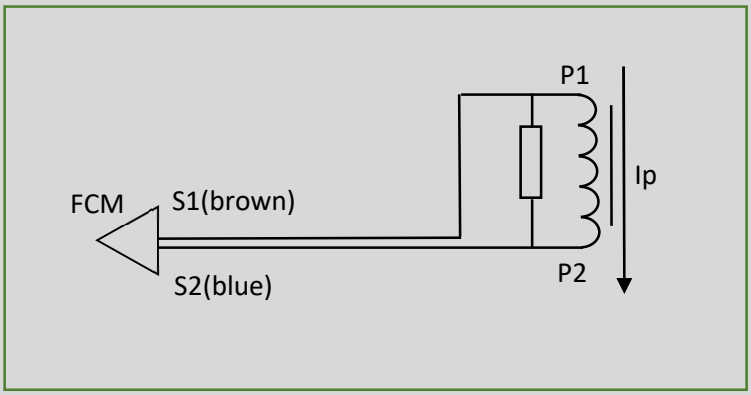

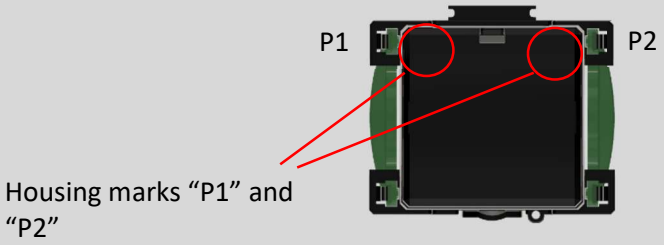

Pay attention to the P1, P2 marking on the housing

Correction factor definition

The current sensor provides individually correction factors which are defined by following rule:

$$CF_I = \frac{U_{Sr}}{U_S} \qquad \text{and} \qquad \varphi_{0_{cor}} = -\varphi_S \rightarrow \text{defined at 100\% In}$$

CF_I... is the correction factor of the amplitude error (U_S*CF_I)
φ_{0cor}... is the correction factor of the phase shift error (φ_S+φ_{0cor})
U_{Sr}... is the rated secondary voltage
U_S... is the measured secondary voltage according the routine test protocol
φ_S... is the measured secondary phase shift error according the routine test protocol

Typical Accuracy

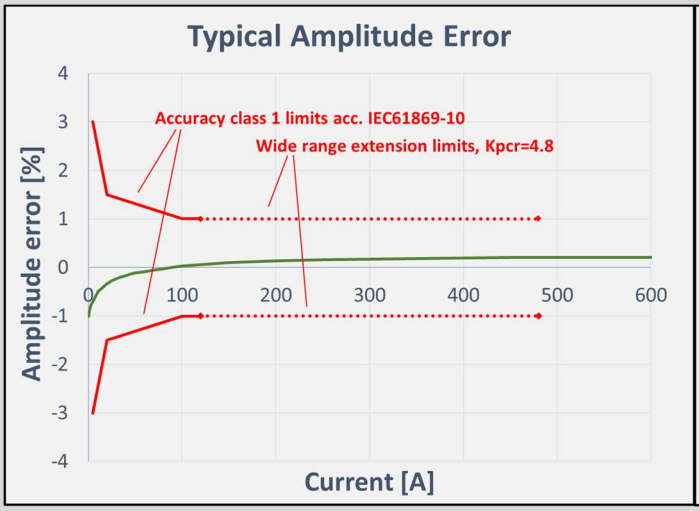

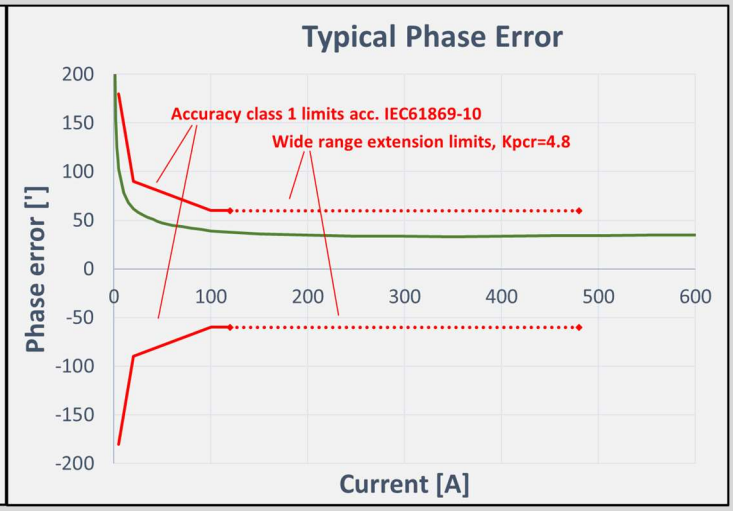

Specification

Applied Standards:	IEC61869-1, IEC61869-6, IEC61869-10
Nominal ratio:	100A // 225mV
Rated primary current:	100A – 400A
Thermal continuous current:	120% (480A)
Wide range behaviour (Kpcr):	4.8
Secondary output:	225mV
Burden:	≥20kΩ
Rated short time thermal current:	25kA, 1s
Isolation voltage:	$720V_{AC}$/3kV/-
Accuracy class:	1/0,5 by using correction CF_I and φ_{ocor} according IEC61869-10
Operating temperature range:	-25°C to +55°C
Storage temperature range:	-40°C to +80°C
Frequency:	50 or 60Hz
Cable:	2pole cable, 7m, open ends (brown-S1, blue-S2)

23.01.2020 by Greenwood-Power