TECHNICAL DATA SHEET

Current Sensor

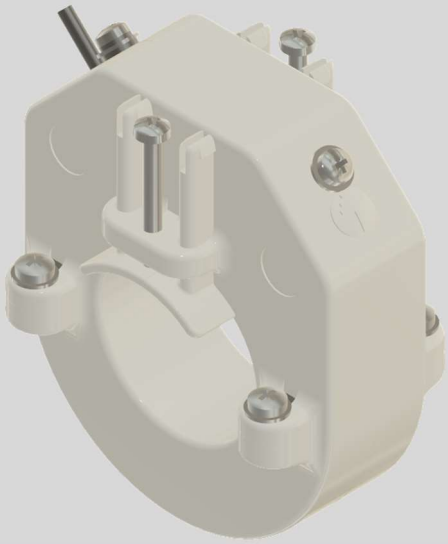

Phase current sensor
NxxxT-xx

Non-conventional -
instrument current transformer

Description

The current sensor range of sensors unifies high cost efficiency with maximum accuracy in a combined testing system. This product is designed for use in conjunction with devices, which are compatible to the IEC standard. This current sensor is for Retrofit applications due to the possibility to split this transformer during installation.

Features

- No calibration on site is needed
- Class 3/1/0,5 & 5P20 acc. IEC61869-10
- Cost efficient design
- Split core for easy installation
- For cable diameters from 20 to 60mm
- Accuracy over complete lifespan

Dimensions

The current transformer is divisible and fit on cables up to 55mm diameter. The clamping system is done with screws so the fixation of the two half's of the transformer.

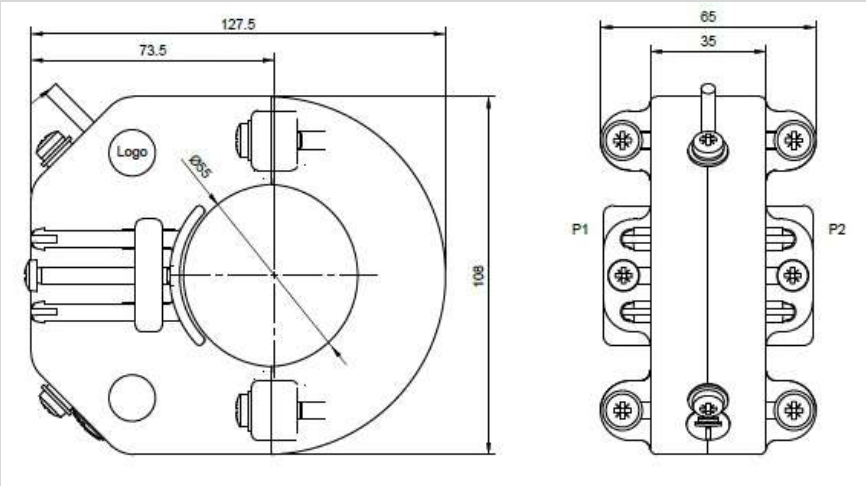

Installation

The current sensors are simple to install, the split core designs make it easy to install, where the main cable is already installed.

There are some important points that must be considered during the installation process:

- Always power down before installation
- Due to the design of this product, there is no danger of high voltages, if the sensor is not short circuited or connected to a measurement device
- Only for insulated cables or insulated areas on the T-cable connector, maximum voltage 720VAC$_{R.M.S}$

Shield of the medium voltage cable MUST BE led through the current sensor (see graphic)

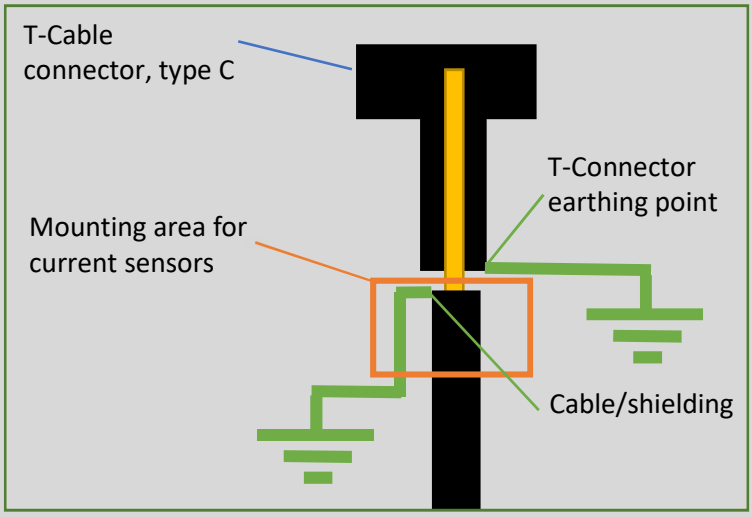

Connection

The current sensor is directly connected to a measurement device.

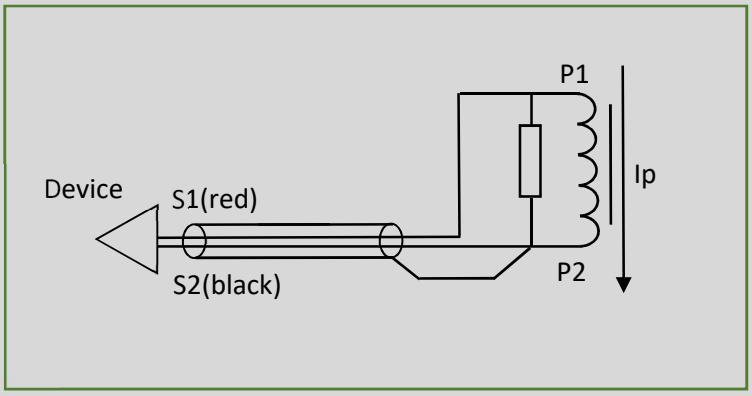

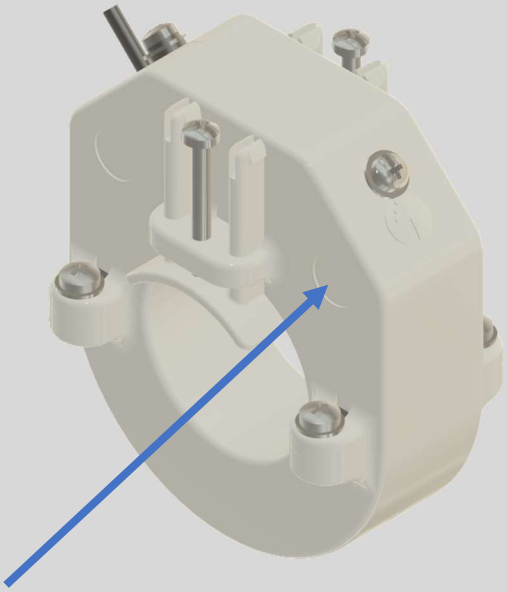

Pay attention to the P1, P2 marking

Specification

Applied Standards:	IEC61869-10
Primary current:	300A, Ext. 200%*
Secondary output:	225mV*
Burden:	>20kΩ
Rated short time thermal current:	25kA, 3s
Isolation voltage:	$720V_{AC}$/3kV/-
Accuracy class:	3/1/0,5 according IEC61869-10
Protection class:	max. 5P20
Operating temperature range:	-25°C to +55°C
Storage temperature range:	-40°C to +80°C
Frequency:	50 or 60Hz
Cable:	2pole, shielded, twisted pair, 2m or more acc. customer definition, open ends (red-S1, black-S2)

*… or customer defined

24.03.2019 by Greenwood-Power